CHAITANYA BHARATHI INSTITUTE OF TECHNOLOGY

An Autonomous Institute | Affiliated to Osmania University

Kokapet Village, Gandipet Mandal, Hyderabad, Telangana-500075, www.cbit.ac.in

Approved by | Affiliated to | UGC Autonomous | 10 Programs Accredited by NBA | Grade A++ in NAAC | All India Ranking 151-200 Band nirf

COMMITTED TO RESEARCH, INNOVATION AND EDUCATION 46 years

# DEPARTMENT OF ECE

# Design of Portable IoT-Enabled P.O.C Water Quality Instrument


Name of the students:

M.Pavan Kalyan 160122735116

CH.Sai Sri Harsha 160122735100

K.Khashyap 160122735110

Name of the Guide:

Sri.N.Jagan Mohan Reddy

Designation:

Assistant Professor

# Motivation Of The Work

- Access to **safe drinking water** is a basic human need, yet more than **2 billion people globally rely on contaminated sources** (WHO/UNICEF).
- **Laboratory-based techniques** like ICP-MS, Ion Chromatography, and culture tests are **accurate but costly, time-consuming, and require skilled personnel**.
- **Portable kits and smartphone apps** exist but are often **limited to single-parameter testing**, prone to **lighting errors**, and lack accuracy.
- **Raspberry Pi and other embedded prototypes** offer improvements but remain **bulky, power-hungry, and impractical** for rural deployment.
- There is a **critical need for a low-cost, portable, IoT-enabled, AI-powered device** that can deliver **multi-parameter, real-time water quality monitoring** with accuracy close to laboratory standards.

# Literature survey

| Title of the paper | World Health Organization, *Guidelines for Drinking-Water Quality* |
|---|---|
| Author of the paper | WHO Press |
| Name of the journal | |
| Volume no/issue no/page no/year of publication | 4th ed. Geneva, Switzerland: WHO Press, 2022 |
| Work done | The World Health Organization (WHO) provides global guidelines for drinking water quality, defining permissible limits for microbial, chemical, and physical parameters. These guidelines form the international benchmark for evaluating safe water and are critical for projects targeting community health. |
| Advantages of the work | Universally recognized, comprehensive, scientific basis |
| Disadvantages if the work | Generic, may not reflect local contamination patterns. |

| **Title of the paper** | ***Drinking Water Specification*** |
|---|---|
| Author of the paper | BIS |
| Name of the journal | Bureau of Indian Standards |
| Volume no/issue no/page no/year of publication | *IS 10500* |
| Work done | The Bureau of Indian Standards (BIS) IS 10500:2012 sets the national specifications for drinking water in India. It defines acceptable and permissible limits for biological and chemical parameters, making it a key reference for water monitoring in Indian contexts. |
| Advantages of the work | Tailored to Indian conditions, government-mandated. |
| Disadvantages if the work | Implementation often inconsistent at ground level. |

| Title of the paper | National Primary Drinking Water Regulations |
|---|---|
| Author of the paper | US EPA |
| Name of the journal | |
| Volume no/issue no/page no/year of publication | EPA, 2021 |
| Work done | The United States Environmental Protection Agency (EPA) outlines National Primary Drinking Water Regulations, which include Maximum Contaminant Levels (MCLs) for heavy metals, nitrates, chlorine, and microbial indicators. These standards serve as an international reference for compliance and safety. |
| Advantages of the work | Strong enforcement in the US, evidence-based. |
| Disadvantages  if the work | High standards may not be economically practical in developing nations. |

| **Title of the paper** | ***Progress on Household Drinking Water, Sanitation and Hygiene 2000–2020*** |
|---|---|
| Author of the paper | UNICEF and WHO |
| Name of the journal | *International Conference on Computer, Communication, Chemical, Materials and Electronic Engineering (IC4ME2)* |
| Volume no/issue no/page no/year of publication | Geneva: United Nations Children's Fund, 2021. |
| Work done | A joint UNICEF–WHO report highlights that more than 2 billion people globally rely on contaminated water sources, with waterborne diseases responsible for hundreds of thousands of deaths annually. This underlines the urgency for decentralized, rapid water testing methods. |
| Advantages of the work | Highlights urgent need, globally validated data. |
| Disadvantages if the work | Provides awareness but not direct technical solutions. |

| **Title of the paper** | ***Drinking Water Quality and Treatment: A Handbook on Drinking Water*** |
|---|---|
| Author of the paper | R. R. Trussell |
| Name of the journal | |
| Volume no/issue no/page no/year of publication | 2012 |
| Work done | Trussell's handbook on drinking water treatment and quality provides in-depth coverage of treatment methods and monitoring practices. It serves as a foundation for understanding both conventional laboratory and modern approaches to water safety. |
| Advantages of the work | Strong academic reference, detailed coverage. |
| Disadvantages  if the work | Mostly lab-focused, not portable solutions. |

| Title of the paper | Escherichia coli: the best biological drinking water indicator for public health protection |
|---|---|
| Author of the paper | S. C. Edberg, E. W. Rice, R. J. Karlin, and M. J. Allen |
| Name of the journal | *Journal of Applied Microbiology*, |
| Volume no/issue no/page no/year of publication | vol. 88, no. S1, pp. 106S–116S, Apr. 2000. |
| Work done | Edberg and colleagues emphasize Escherichia coli (E. coli) as the most reliable indicator of fecal contamination. Even a single colony-forming unit per 100 mL indicates unsafe water, justifying the focus on microbial testing in water monitoring projects. |
| Advantages of the work | High reliability, widely accepted. |
| Disadvantages if the work | Culture methods are slow (24–48 hrs). |

| Title of the paper | Global burden of waterborne diseases |
|---|---|
| Author of the paper | A. H. Havelaar et al. |
| Name of the journal | *Proceedings of the National Academy of Sciences* |
| Volume no/issue no/page no/year of publication | vol. 112, no. 32, pp. 12301–12306, 2015. |
| Work done | Havelaar's study discusses the global burden of waterborne diseases, showing how contaminated water continues to cause widespread morbidity and mortality. The findings stress the importance of rapid detection technologies for public health interventions. |
| Advantages of the work | Large-scale global data, proves need for intervention. |
| Disadvantages if the work | Does not propose technical solutions. |

| **Title of the paper** | ***Casarett and Doull's Toxicology: The Basic Science of Poisons*** |
|---|---|
| Author of the paper | D. L. Eaton, L. S. Klaassen, and C. D. Klaassen |
| Name of the journal | |
| Volume no/issue no/page no/year of publication | 9th ed. New York, NY: McGraw-Hill, 2019. |
| Work done | This toxicology reference outlines the health effects of chemical pollutants such as lead, mercury, and nitrates. It provides the scientific foundation for including multiple chemical contaminants in water testing devices to assess both acute and chronic risks |
| Advantages of the work | Strong toxicological background, useful for risk analysis. |
| Disadvantages  if the work | Lacks focus on real-time detection technologies. |

| **Title of the paper** | ***Reaction Mechanisms in Environmental Organic Chemistry*** |
|---|---|
| Author of the paper | R. A. Larson and E. J. Weber |
| Name of the journal | |
| Volume no/issue no/page no/year of publication | Boca Raton, FL: CRC Press, 1994. |
| Work done | Larson and Weber analyze environmental organic chemistry reactions, explaining how pollutants interact in aquatic systems. Their work highlights the importance of considering synergistic effects of multiple contaminants in water quality monitoring. |
| Advantages of the work | Shows need for multi-parameter analysis. |
| Disadvantages  if the work | Theoretical, not technology-focused. |

| Title of the paper | Trace metal concentrations in aquatic invertebrates: why and so what? |
|---|---|
| Author of the paper | P. S. Rainbow |
| Name of the journal | *Environmental Pollution* |
| Volume no/issue no/page no/year of publication | vol. 120, no. 3, pp. 497–507, Mar. 2002. |
| Work done | Rainbow's research on trace metals in aquatic organisms explains how metals accumulate and persist in ecosystems. This long-term perspective supports the inclusion of heavy metal testing in water monitoring to prevent bioaccumulation risks. |
| Advantages of the work | Highlights long-term ecological impacts. |
| Disadvantages if the work | Monitoring methods not detailed. |

| Title of the paper | Lead Toxicity in Humans: Sources and Health Impacts |
|---|---|
| **Author of the paper** | J. Nriagu |
| **Name of the journal** | Wiley Book |
| **Volume no/issue no/page no/year of publication** | Wiley, New York, 2018 |
| **Work done** | Discusses sources, pathways, and health impacts of lead toxicity in humans. |
| **Advantages of the work** | Comprehensive coverage of lead exposure risks; authoritative source. |
| **Disadvantages if the work** | Focused only on lead; not a multi-contaminant study. |

| Title of the paper | Determination of nitrate and nitrite in drinking water: a review |
|---|---|
| **Author of the paper** | A. T. Lawal and F. G. Oyewole |
| **Name of the journal** | Journal of Environmental Chemical Engineering |
| **Volume no/issue no/page no/year of publication** | Vol. 8, No. 4, pp. 103–112, 2020 |
| **Work done** | Reviews analytical methods for detecting nitrate and nitrite in drinking water. |
| **Advantages of the work** | Covers multiple detection techniques; critical comparison of methods. |
| **Disadvantages if the work** | Limited to nitrate/nitrite; lacks field-implementation aspects. |

| Title of the paper | Fluoride in drinking water: a scientific review of EPA's standards |
|---|---|
| **Author of the paper** | R. Fawell and M. J. Bailey |
| **Name of the journal** | Environmental Health Perspectives |
| **Volume no/issue no/page no/year of publication** | Vol. 114, No. 3, pp. 367–371, 2006 |
| **Work done** | The authors review the scientific reasoning behind the U.S. EPA's fluoride standards for safe drinking water. The paper explains both the benefits of fluoride in small amounts and its harmful effects at higher concentrations. Although it is a peer-reviewed and important reference, the study is dated and may not fully reflect newer regulatory updates. |
| **Advantages of the work** | Scientific, peer-reviewed assessment; addresses public health concerns. |
| **Disadvantages if the work** | Older study; may not reflect updated standards. |

| Title of the paper | Residual chlorine in drinking water: an analysis of physicochemical factors |
|---|---|
| **Author of the paper** | S. Chowdhury, M. Champagne, and P. McLellan |
| **Name of the journal** | Water Research |
| **Volume no/issue no/page no/year of publication** | Vol. 43, No. 17, pp. 4207–4214, 2009 |
| **Work done** | Analyzes factors affecting residual chlorine levels in drinking water distribution systems. |
| **Advantages of the work** | Identifies key influencing parameters; practical relevance to water utilities. |
| **Disadvantages if the work** | Limited to chlorine monitoring; does not discuss multi-parameter monitoring. |

| Title of the paper | Microbial quality of drinking water and prevalence of waterborne diseases in developing countries |
|---|---|
| **Author of the paper** | A. M. Hassen et al. |
| **Name of the journal** | Environmental Monitoring and Assessment |
| **Volume no/issue no/page no/year of publication** | Vol. 185, No. 12, pp. 10257–10263, 2013 |
| **Work done** | This paper investigates microbial contamination, especially E. coli and coliform bacteria, in water supplies of developing nations. It highlights the prevalence of waterborne diseases and the link between poor sanitation and unsafe drinking water. The study is valuable for its real-world data but lacks advanced detection technologies, relying mainly on conventional microbial testing. |
| **Advantages of the work** | Real-world data from developing countries; public health focus. |
| **Disadvantages if the work** | Regional specificity; lacks advanced detection technologies. |

| Title of the paper | Smartphone-based colorimetric analysis for environmental monitoring |
|---|---|
| **Author of the paper** | J. Choi et al. |
| **Name of the journal** | Sensors and Actuators B: Chemical |
| **Volume no/issue no/page no/year of publication** | Vol. 304, p. 127273, Jan. 2020 |
| **Work done** | The authors demonstrate how smartphones can be turned into simple and cost-effective colorimetric devices for environmental sensing. Using the phone's built-in camera and apps, the method allows users to analyze the color change of strips for detecting certain contaminants. While the approach is portable and user-friendly, its accuracy heavily depends on lighting conditions and phone hardware, making results inconsistent. |
| **Advantages of the work** | Portable; cost-effective; user-friendly. |
| **Disadvantages if the work** | Accuracy may vary with phone hardware and lighting conditions. |

| Title of the paper | Deep learning for colorimetric detection in chemical sensing |
|---|---|
| **Author of the paper** | M. Hosseinpour et al. |
| **Name of the journal** | Analytica Chimica Acta |
| **Volume no/issue no/page no/year of publication** | Vol. 1170, p. 338649, Nov. 2021 |
| **Work done** | The paper applies deep learning, specifically convolutional neural networks, to improve the accuracy of colorimetric chemical detection. By training models on strip images, it demonstrates how AI can reduce human interpretation errors and achieve quantitative precision. Although powerful, the approach requires computational resources and is not always easily deployable in portable, low-power systems. |
| **Advantages of the work** | High accuracy; modern AI integration. |
| **Disadvantages if the work** | Requires computational resources; not always field-deployable. |

| Title of the paper | Photometric detection of trace metals in water: techniques and applications |
|---|---|
| **Author of the paper** | A. K. Shukla and V. K. Gupta |
| **Name of the journal** | Analytical Methods |
| **Volume no/issue no/page no/year of publication** | Vol. 11, No. 4, pp. 567–576, 2019 |
| **Work done** | This study explores photometric techniques for detecting trace metals in water samples. It details the use of low-cost photometers and reagents for quantifying contaminants like lead and copper. While the methods are reliable and affordable, they are limited in scope to specific parameters and do not integrate IoT for remote monitoring. |
| **Advantages of the work** | Detailed techniques; suitable for low-cost detection. |
| **Disadvantages if the work** | Limited scope to trace metals; not IoT-integrated. |

| Title of the paper | Heavy metal contamination in groundwater: health risk assessment |
|---|---|
| **Author of the paper** | P. Kumar and R. Yadav |
| **Name of the journal** | Environmental Science and Pollution Research |
| **Volume no/issue no/page no/year of publication** | Vol. 27, No. 2, pp. 1125–1136, 2020 |
| **Work done** | This work evaluates the presence of toxic heavy metals like lead, chromium, and arsenic in groundwater sources and their associated health impacts. The paper combines environmental analysis with public health risk assessment models to estimate long-term exposure risks. However, the findings are mostly region-specific and provide assessment-based insights rather than offering a technological monitoring solution. |
| **Advantages of the work** | Combines environmental and health risk analysis. |
| **Disadvantages if the work** | Limited geographical scope; assessment-based, not solution-oriented. |

| Title of the paper | Evaluation of rapid test kits for microbiological water analysis: a systematic review |
|---|---|
| **Author of the paper** | M. A. Hassan et al. |
| **Name of the journal** | Water Research |
| **Volume no/issue no/page no/year of publication** | Vol. 182, p. 115939, Jan. 2020 |
| **Work done** | This systematic review evaluates commercially available rapid test kits for detecting microbial contaminants such as E. coli and coliforms. It compares different kits in terms of accuracy, usability, and field applicability. The study offers useful insights for decision-making but does not propose a new experimental device, making it more of a comparative review. |
| **Advantages of the work** | Provides comparative insights; identifies strengths and weaknesses of available rapid kits; useful for field decision-making. |
| **Disadvantages if the work** | Review-based, no new experimental system proposed; limited by quality and scope of included studies. |

| Title of the paper | IoT-enabled water quality monitoring: a review |
|---|---|
| **Author of the paper** | D. Wu, F. Wu, and B. Liang |
| **Name of the journal** | IEEE Internet of Things Journal |
| **Volume no/issue no/page no/year of publication** | Vol. 9, No. 3, pp. 1574–1589, Feb. 2022 |
| **Work done** | This paper reviews the different IoT technologies that have been applied to water quality monitoring over the past decade. It highlights various sensors, network architectures, and cloud frameworks used for data collection and analysis. The study mainly focuses on recent IoT solutions and their effectiveness in addressing water contamination issues, but it remains theoretical without proposing experimental validation. |
| **Advantages of the work** | Covers wide range of IoT solutions; recent and relevant. |
| **Disadvantages if the work** | Review only; lacks experimental implementation. |

| Title of the paper | Applications of IoT in smart cities: water quality perspective |
|---|---|
| **Author of the paper** | P. Ghosh and A. Banerjee |
| **Name of the journal** | Smart Sustainable Cities and Societies |
| **Volume no/issue no/page no/year of publication** | Vol. 2, pp. 89–101, 2022 |
| **Work done** | The paper discusses how IoT can be applied in smart city frameworks, with water quality monitoring as a key case study. It emphasizes the integration of sensors, networks, and cloud platforms for real-time urban water safety. While it provides a futuristic outlook, the work remains conceptual and does not report large-scale experimental deployment. |
| **Advantages of the work** | Emerging application in urban context; highlights smart city integration. |
| **Disadvantages if the work** | Conceptual; lacks practical deployment results. |

| Category | Year | Implementation | Disadvantages |
|---|---|---|---|
| Standards & Reports (WHO, BIS, EPA, UNICEF) | 2012 –22 | Standards, MCL limits, guidelines, Statistics | NoReal Time System |
| Smartphone-based (Choi et al.) | 2020 | Camera-based detection | Lighting dependency, low accuracy |
| Deep Learning (Hosseinpour et al.) | 2021 | CNN-based sensing | High compute, not edge-ready |
| Photometric (Shukla et al.) | 2019 | Optical metal detection | Single parameter, not portable |
| Rapid Kits (Hassan et al.) | 2020 | Kit comparison | Manual, low accuracy |
| IoT Systems (Wu, Ghosh) | 2022 | Sensor + cloud monitoring | Theoretical, no AI |
| Microbial Methods (Hassen et al.) | 2013 | Lab culture testing | Slow (24–48 hrs) |
| Heavy Metal Analysis (Kumar et al.) | 2020 | Risk analysis | No detection system |

## LITERATURE SURVEY OUTCOMES:

- **Laboratory methods (ICP-MS, IC, culture tests)** : Highly accurate but costly, time-consuming, and non-portable.
- **Portable photometers & ion-selective electrodes** =Useful but limited to few parameters, frequent calibration needed.
- **Smartphone-based strip readers** =Low-cost, but poor accuracy due to lighting and device dependency.
- **Raspberry Pi prototypes** =Better control than smartphones, but bulky and power-hungry.
- **Proposed approach** = (**Colorimetric + AI)**Promising trend for achieving lab-like accuracy in portable devices.
- **Gap Identified** =No existing solution that is **low-cost, portable, multi-parameter, AI-integrated, and IoT-enabled** for real-time water quality testing.

# AVAILABLE KITS :

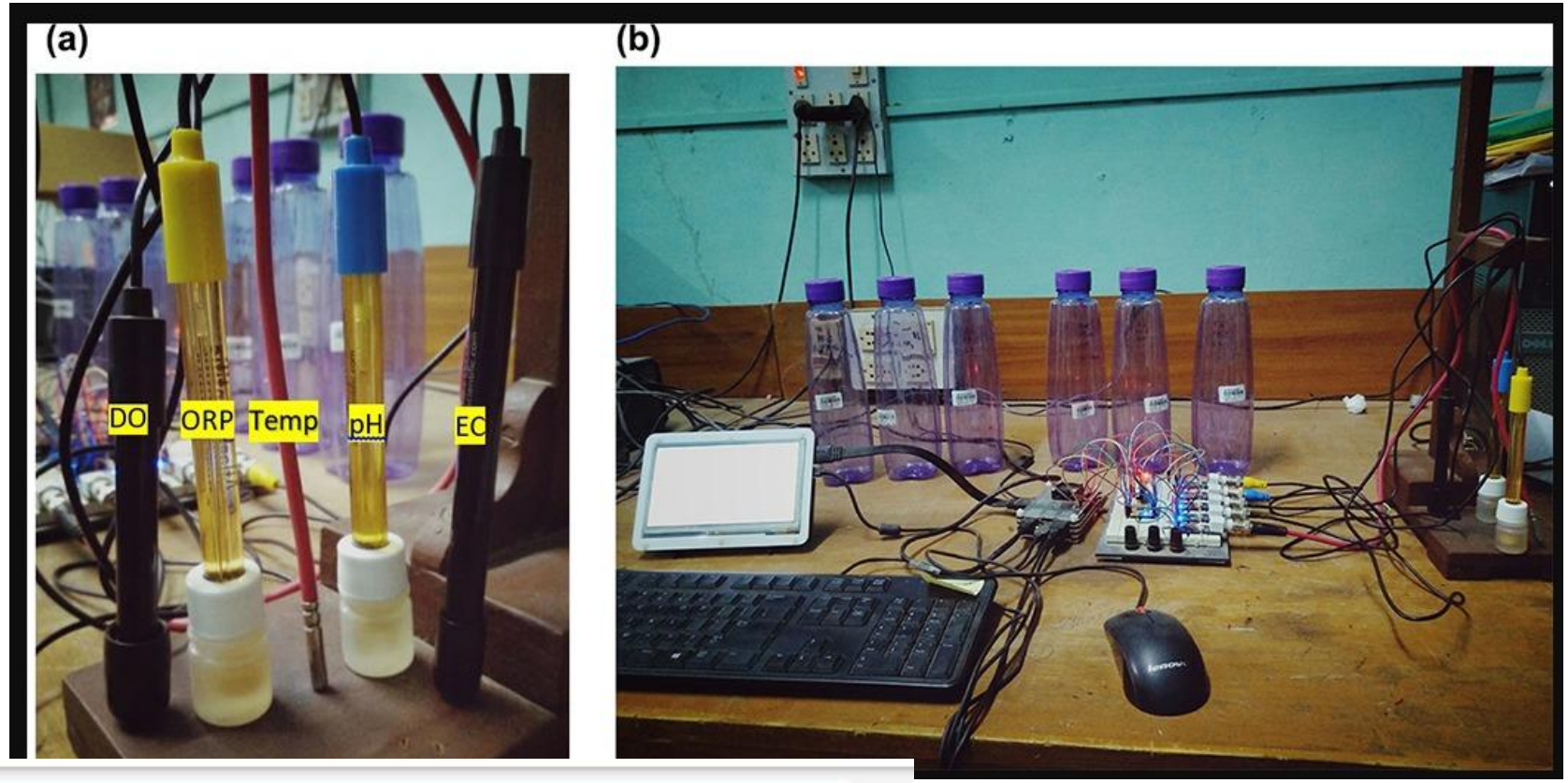

# Areas of the work

- Embedded Systems
- Internet of Things (IoT)
- Artificial Intelligence
- Deep Learning
- Image Processing

# Problem Statement

Current portable water-testing kits and smartphone-based systems fail to provide accurate, multi-parameter analysis under varying conditions. There is a need for a compact, IoT-enabled device that can perform real-time, AI-based colorimetric detection of multiple contaminants with lab-level reliability.

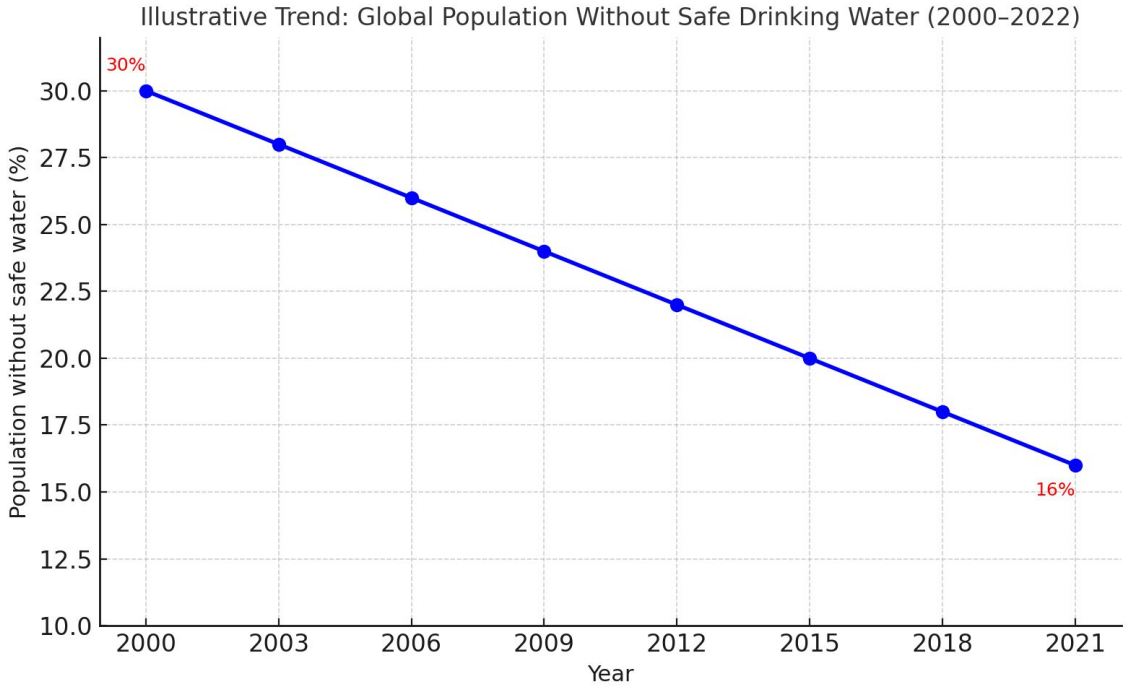

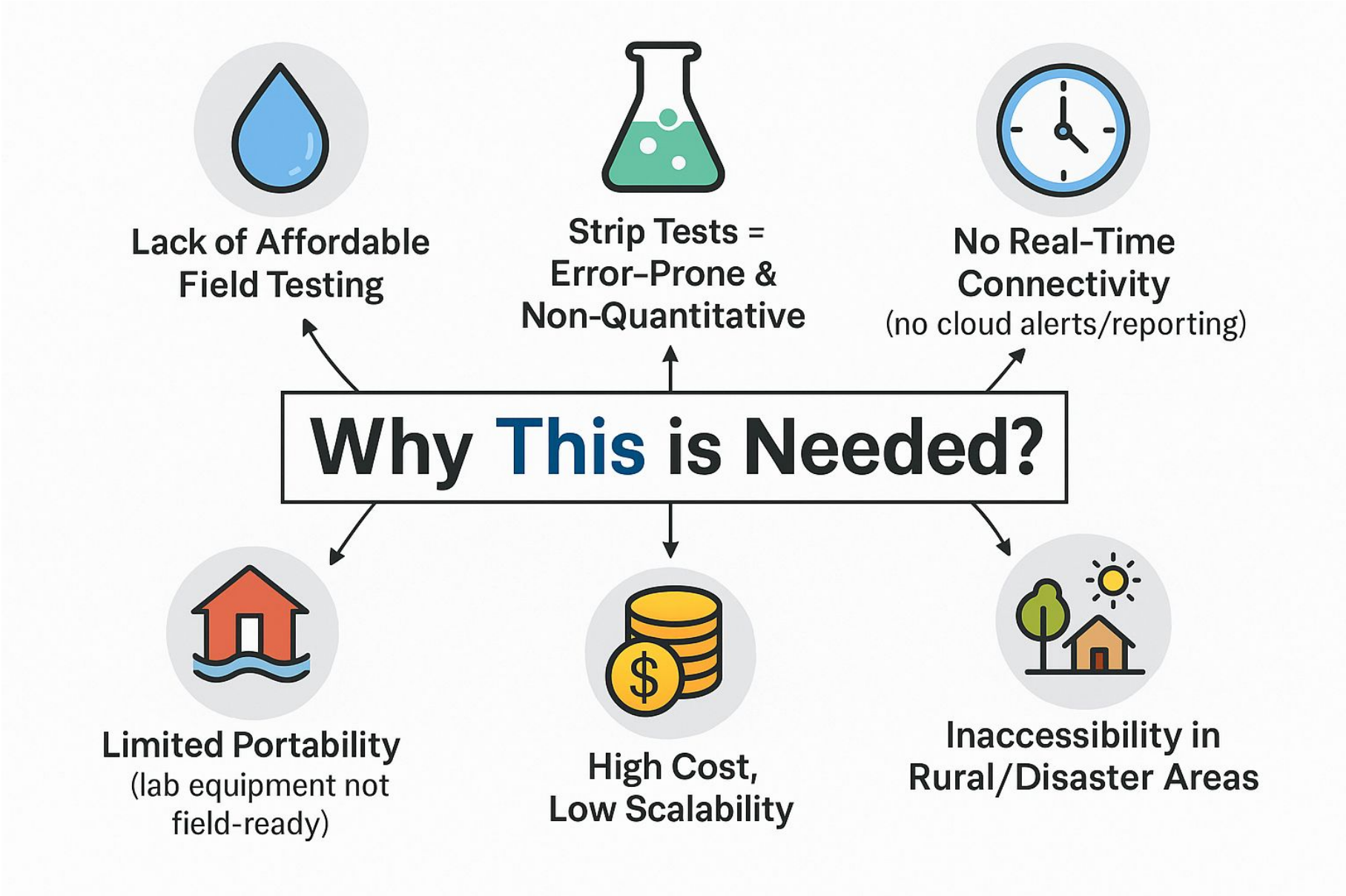
Lack of Affordable Field Testing
Strip Tests = Error-Prone & Non-Quantitative
No Real-Time Connectivity
(no cloud alerts/reporting)
Why This is Needed?
Limited Portability
(lab equipment not field-ready)
High Cost, Low Scalability
Inaccessibility in Rural/Disaster Areas

# Objectives

## 1: Controlled Optical Acquisition Chamber:

Ambient Light-isolation imaging chamber to minimize shadows, glare, and color drift
Fixed camera geometry to maintain consistent imaging conditions and improve repeatability

## 2: Universal Strip Detection & Adaptive Pad Segmentation:

Automatic strip localization using contour detection and perspective correction
Adaptive pad segmentation using 1D intensity profiling and peak detection without fixed grid assumptions

## 3: Perceptual Color Feature Extraction:

CIELAB feature extraction for perceptually uniform and illumination-robust color representation
Color normalization to reduce lighting variation and maintain consistent feature extraction

## 4: Anchor-Based Calibration & Concentration Estimation: (Website,APP)

Anchor-based calibration using manufacturer-defined concentration levels
Anchor-constrained regression with log-domain mapping for concentration estimation

## 5: Portable Edge Deployment & IoT Monitoring: (Touch Based Interface)

Embedded implementation on ESP32-S3 for real-time, low-power processing with touch based user interaction
IoT integration for cloud logging, monitoring, and threshold-based alerts

# Block Diagram

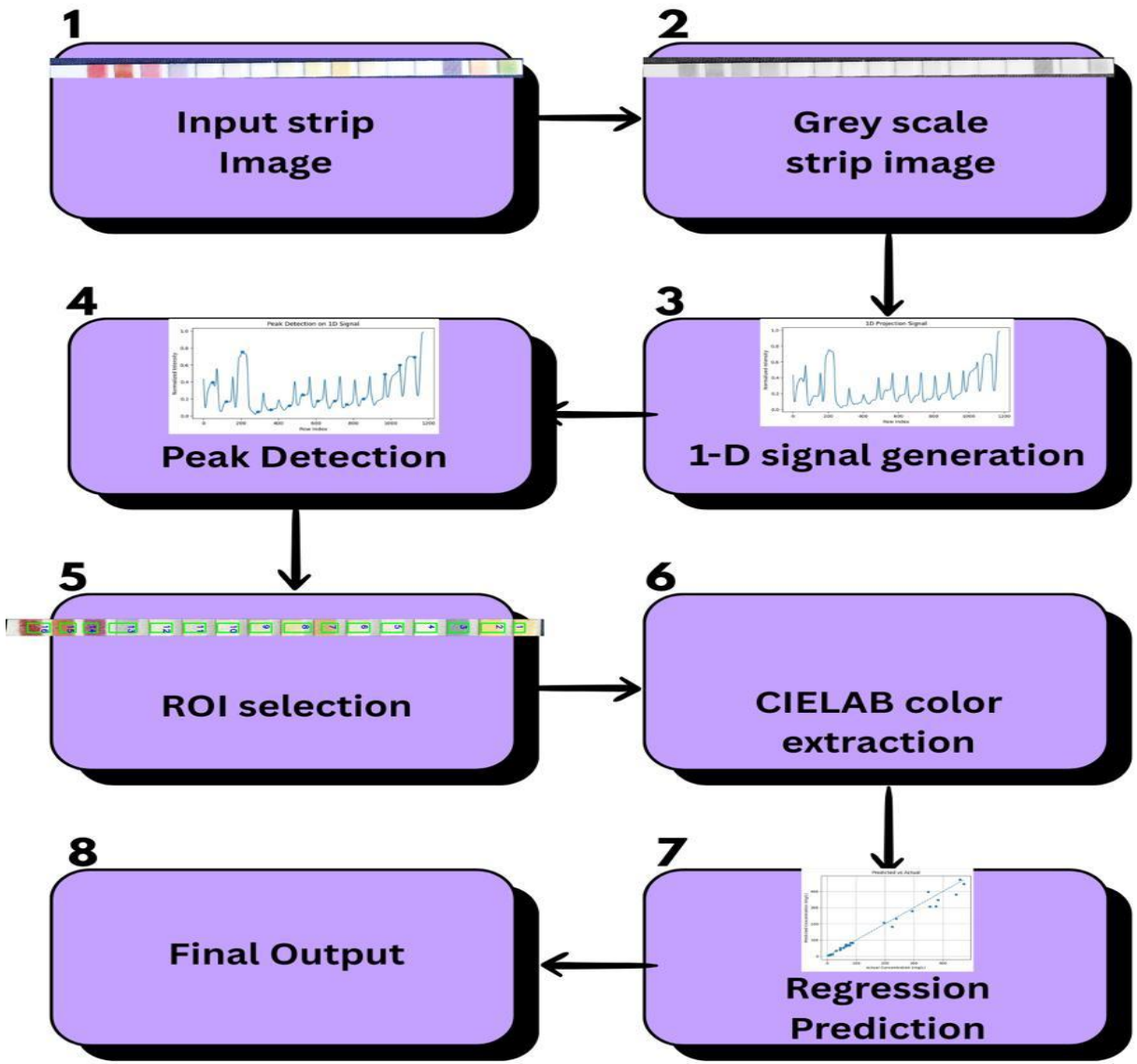

# Tools to be used

## HARDWARE:

Hardware

ESP32-S3 – Image acquisition and edge processing

OV2640 Camera – Strip image capture

Touch Display – User interaction

Li-Po Battery – Portable power supply

USB-UART – Flashing and serial debugging

Charging Module:- TP4056

## SOFTWARE:

OpenCV – Strip detection and segmentation

Python – Processing pipeline execution

NumPy / Pillow – Data and image processing

scikit-learn (.pkl) – Anchor-based regression model

VS Code – Development and web application

Google Colab – Model training and calibration

Streamlit – Local interface and result visualization

PlatformIO / ESP-IDF – Firmware development

**Objective-1 : Controlled Optical Acquisition Chamber ver1:**

The **3D-CAD model** of the portable test kit has been designed, showing proper arrangement of the imaging chamber, ESP32-S3 module, LED illumination, and sample slot

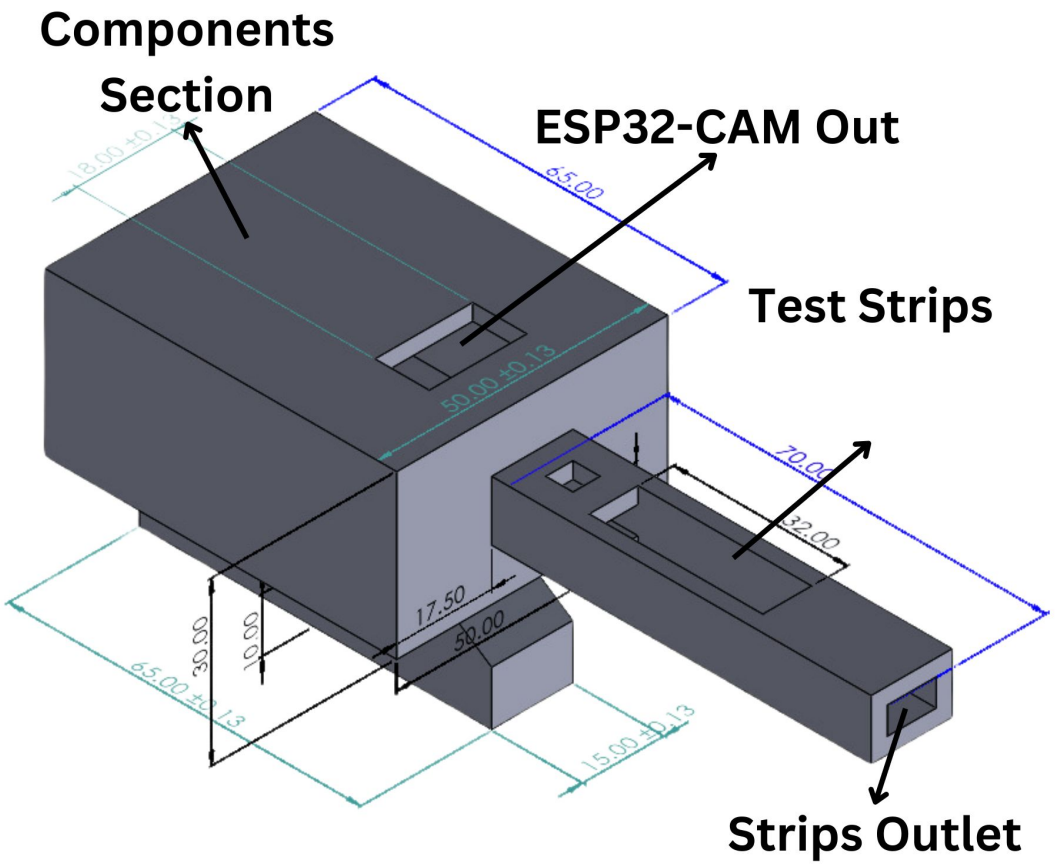


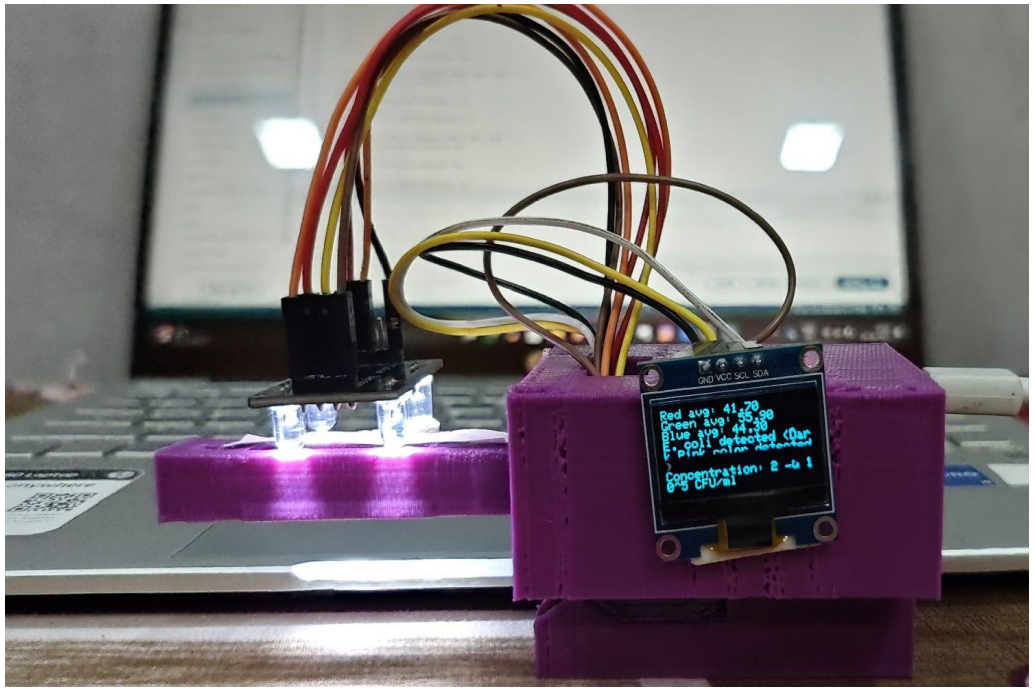

## **Objective-1 :** Controlled Optical Acquisition Chamber ver2:

The **3D-CAD model** of the portable test kit has been designed, showing proper arrangement of the imaging chamber, ESP32-S3 module, LED illumination, and sample slot

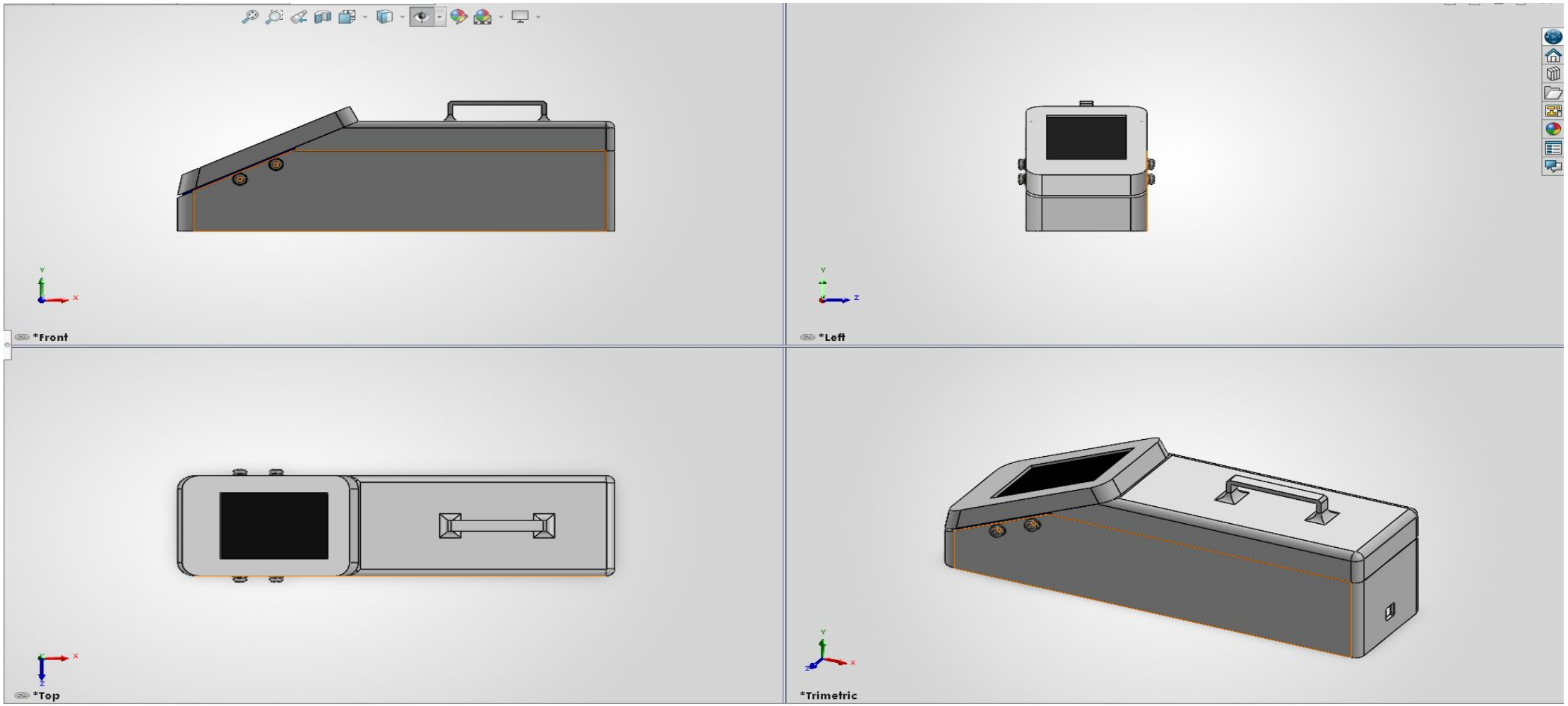

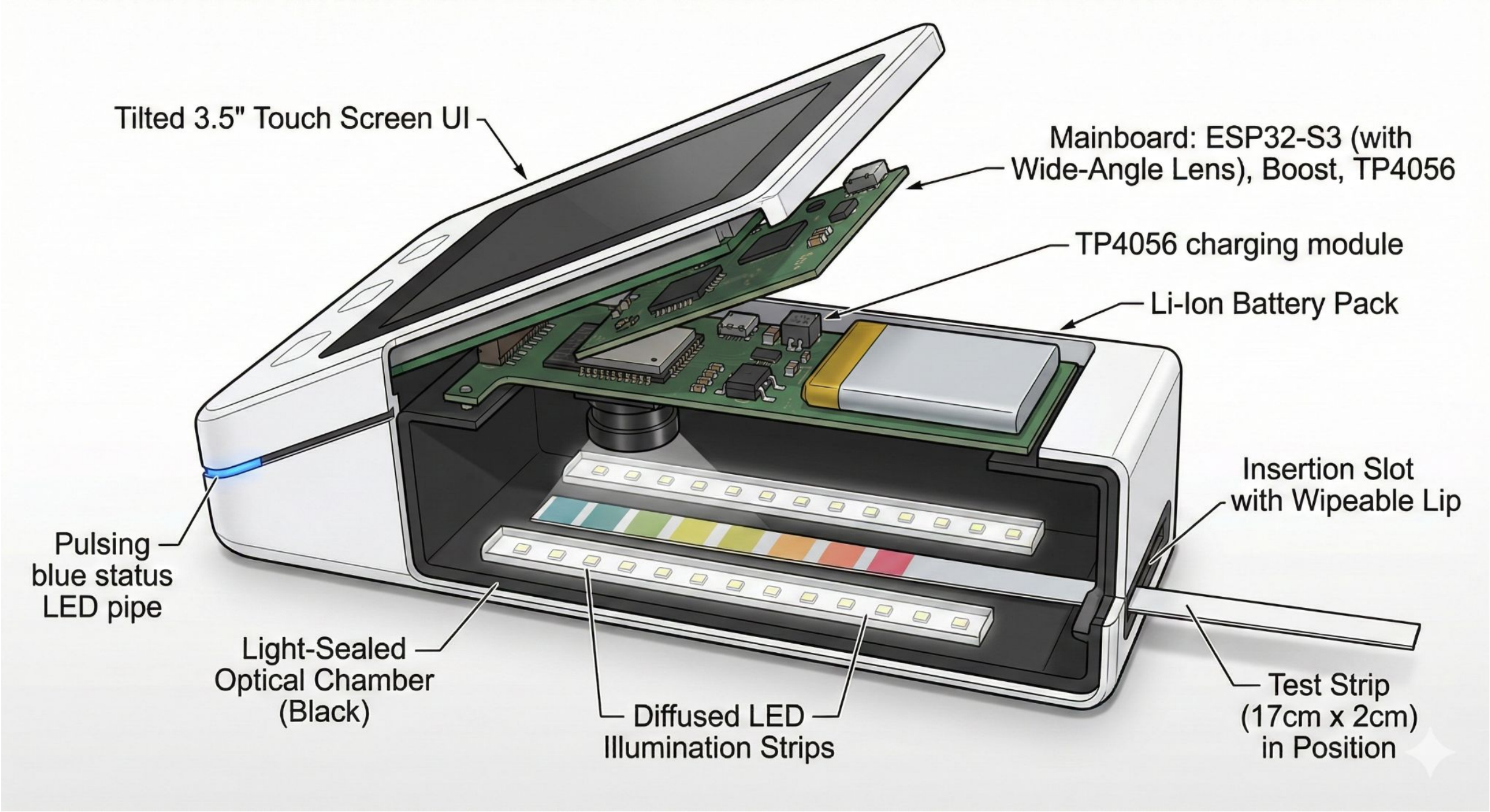
Tilted 3.5" Touch Screen UI
Mainboard: ESP32-S3 (with Wide-Angle Lens), Boost, TP4056
TP4056 charging module
Li-Ion Battery Pack
Insertion Slot with Wipeable Lip
Pulsing blue status LED pipe
Light-Sealed Optical Chamber (Black)
Diffused LED Illumination Strips
Test Strip (17cm x 2cm) in Position

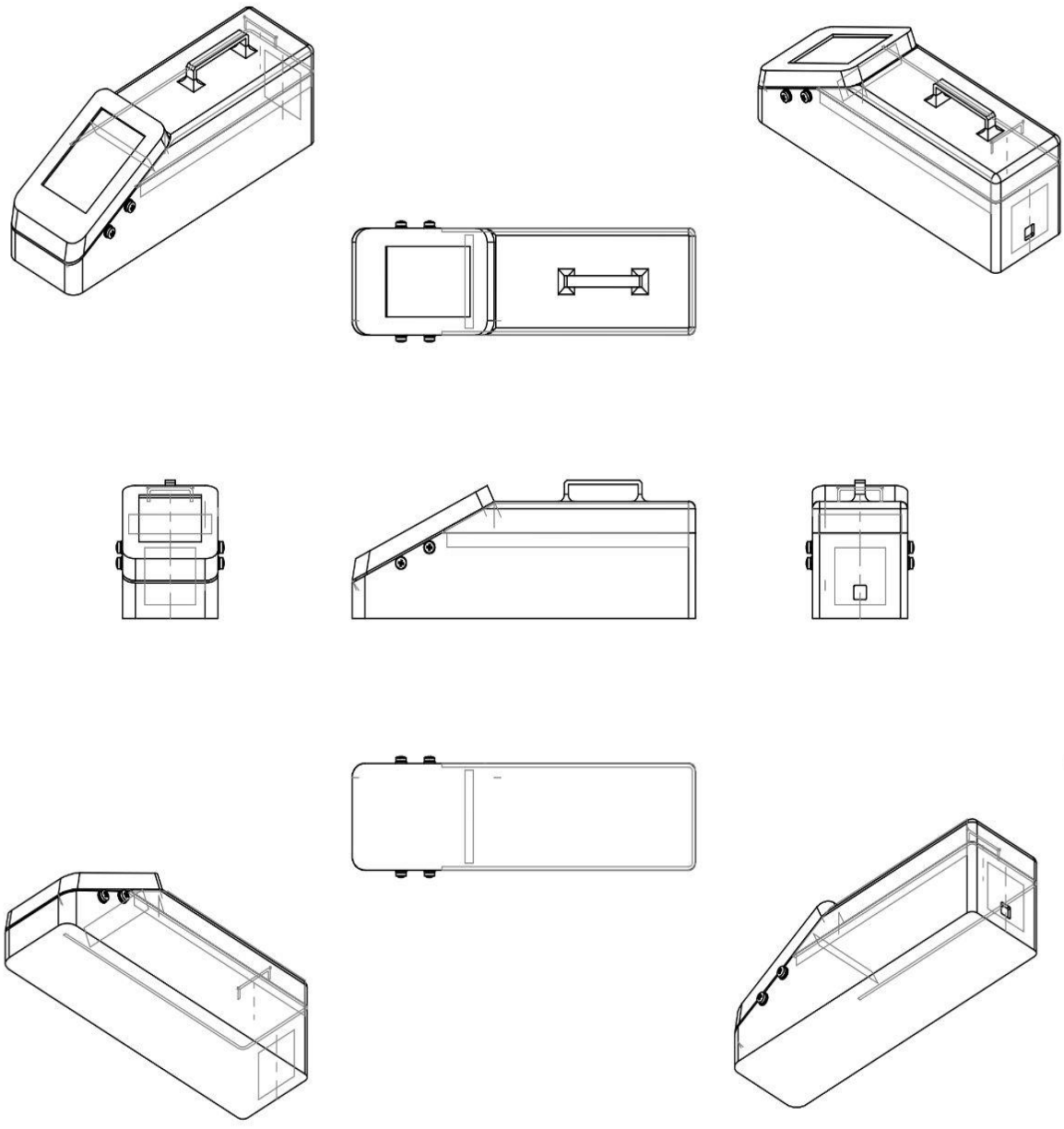

| | | | |
|---|---|---|---|
| UNLESS OTHERWISE SPECIFIED:<br>DIMENSIONS ARE IN MILLIMETERS<br>SURFACE FINISH:<br>TOLERANCES:<br>LINEAR:<br>ANGULAR: | FINISH: | DEBURR AND BREAK SHARP EDGES | DO NOT SCALE DRAWING / REVISION |

| | NAME | SIGNATURE | DATE |
|---|---|---|---|
| DRAWN | | | |
| CHK'D | | | |
| APPV'D | | | |
| MFG | | | |
| Q.A | | | |

TITLE:

MATERIAL:

WEIGHT:

DWG NO. WQM

A4

SCALE:1:5

SHEET 1 OF 1

## Objective-2 : Universal Strip Detection & Adaptive Pad Segmentation:

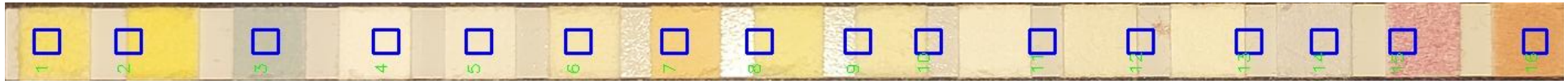

The processing pipeline consists of the following stages:

1. **Strip Localization:**
   The captured image is converted to grayscale and thresholded to extract the dominant strip contour. The largest connected component is identified using contour analysis.
2. **Perspective Rectification:**
   A minimum-area bounding rectangle is computed, and perspective transformation is applied to normalize strip orientation and geometry.
3. **Signal Generation:**
   A one-dimensional intensity profile is generated along the longitudinal axis of the strip by averaging pixel intensities across the strip width.
4. **Adaptive Peak Detection:**
   Reagent pads are localized using peak detection on the 1D signal, where local maxima correspond to pad centers. Adaptive thresholding and minimum peak separation constraints are applied to accommodate varying pad spacing.

This approach supports strip-format flexibility across different manufacturers and eliminates dependence on fixed grid segmentation techniques commonly used in smartphone-based systems.

- **Objective-3 : Perceptual Color Feature Extraction:**

## Anchor-Based Calibration Dataset and Model Training

To enable quantitative contaminant estimation, an anchor-based calibration framework was developed using manufacturer-defined concentration reference levels. For each parameter, discrete concentration points provided in the reference chart were treated as calibration anchors.

Strip images corresponding to each anchor level were captured under controlled illumination within the proposed optical chamber. **CIELAB** color features (L*, a*, b*) were extracted from each pad region and associated with their respective anchor concentrations.

A regression-based mapping was then constructed using the anchor data points. Intermediate concentration levels were estimated through interpolation between adjacent anchors, enabling semi-quantitative prediction while maintaining alignment with manufacturer standards.

This approach reduces dependency on large training datasets while ensuring physically interpretable calibration behavior.

- **Anchor-Based Calibration & Concentration Estimation: (Website,APP)**

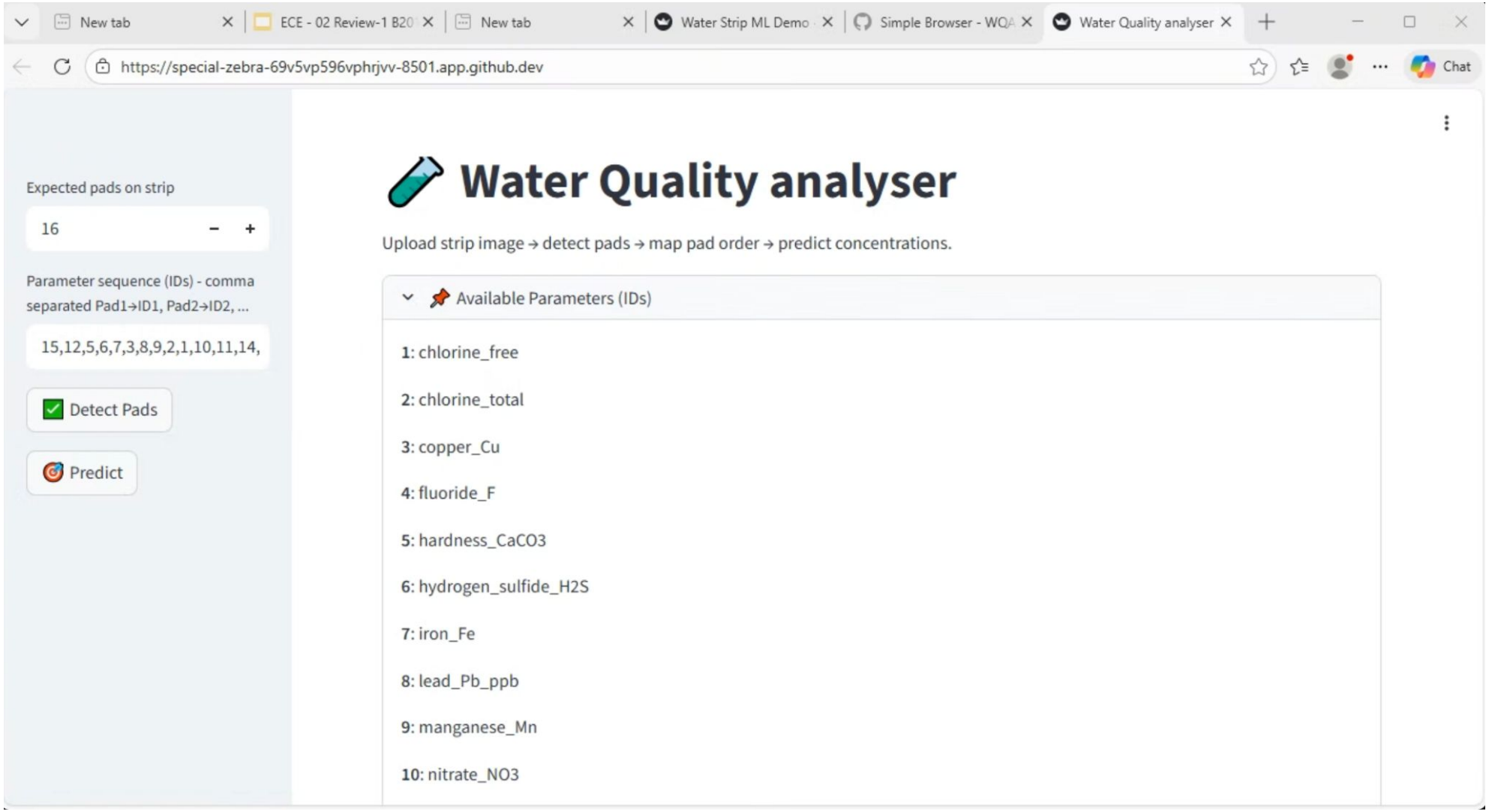

New tab | ECE - 02 Review-1 B20 | New tab | Water Strip ML Demo | Simple Browser - WQA | Water Quality analyser

https://special-zebra-69v5vp596vphrjvv-8501.app.github.dev

Chat

Expected pads on strip

16 − +

Parameter sequence (IDs) - comma separated Pad1→ID1, Pad2→ID2, ...

15,12,5,6,7,3,8,9,2,1,10,11,14,

✅ Detect Pads

🎯 Predict

**7**: iron_Fe

**8**: lead_Pb_ppb

**9**: manganese_Mn

**10**: nitrate_NO3

**11**: nitrite_NO2

**12**: pH

**13**: sodium_chloride_NaCl

**14**: sulfate_SO4

**15**: total_alkalinity_CaCO3

**16**: zinc_Zn

Upload strip image

Drag and drop file here

Limit 200MB per file • JPG, JPEG, PNG

Browse files

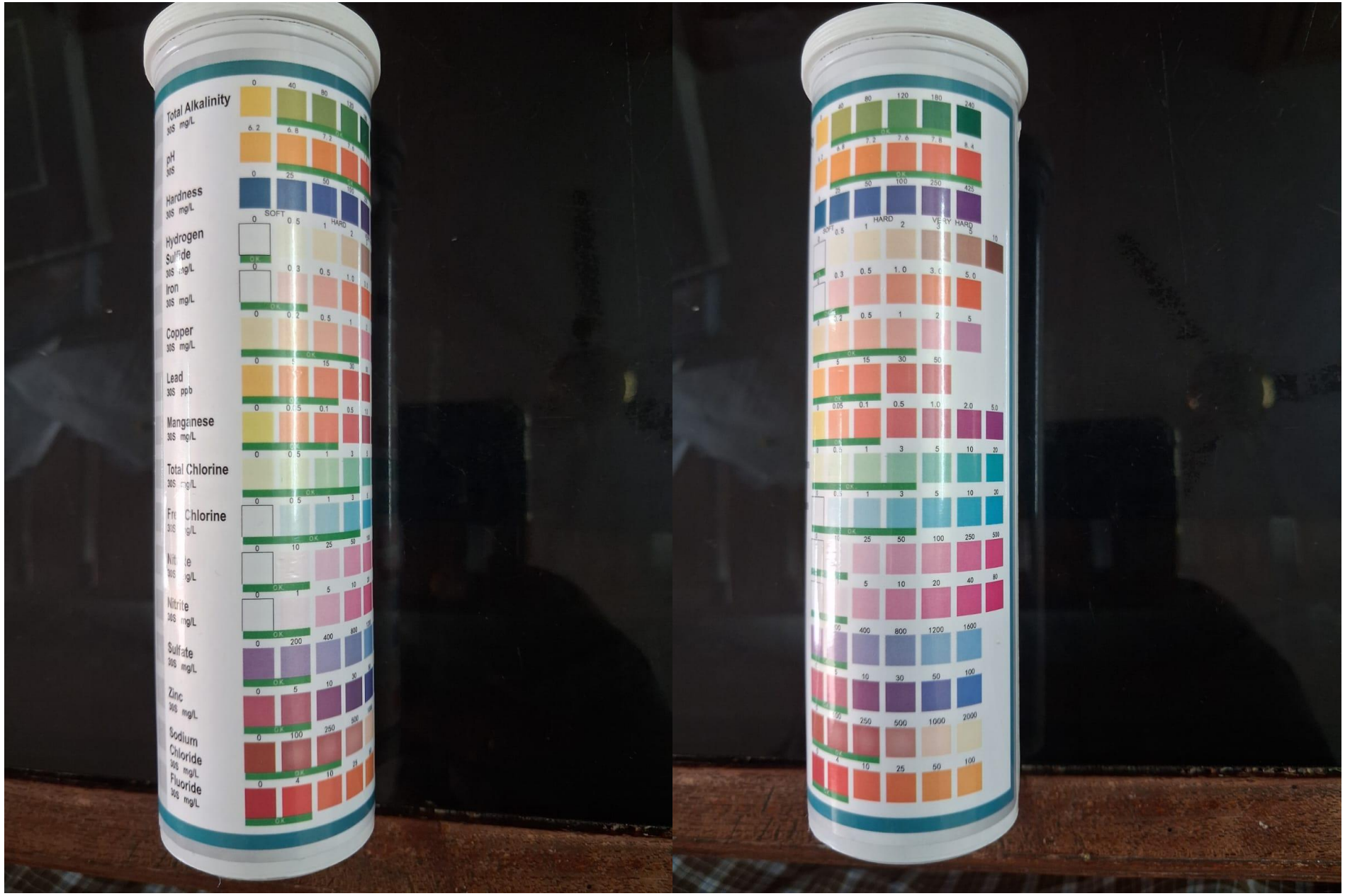
Total Alkalinity
30S mg/L
pH
30S
Hardness
30S mg/L
Hydrogen
Sulfide
Iron
30S mg/L
Copper
30S mg/L
Lead
30S ppb
Manganese
30S mg/L
Total Chlorine
Chlorine
Nitrite
30S mg/L
Sulfate
30S mg/L
Zinc
30S mg/L
Sodium
Chloride
30S mg/L
Fluoride
30S mg/L
SOFT
HARD
VERY HARD

New tab | ECE - 02 Review-1 B20 | New tab | Water Strip ML Demo | Simple Browser - WQA | Water Quality analyser

https://special-zebra-69v5vp596vphrjvv-8501.app.github.dev

Chat

Expected pads on strip

16 − +

Parameter sequence (IDs) - comma separated Pad1→ID1, Pad2→ID2, ...

15,12,5,6,7,3,8,9,2,1,10,11,14,

✅ Detect Pads

🎯 Predict

## ✅ Predictions

| Pad | Param ID | Parameter | L* | a* | b* | Prediction | Units |
|---|---|---|---|---|---|---|---|
| 1 | 15 | total_alkalinity_CaCO3 | 88.02 | -4.17 | 56.3 | 61.0402 | ppm |
| 2 | 12 | pH | 87.32 | -2.68 | 41.77 | 8.0997 | ppm |
| 3 | 5 | hardness_CaCO3 | 78.55 | -1.92 | 13.53 | 1.2946 | ppm |
| 4 | 6 | hydrogen_sulfide_H2S | 93.66 | 0.01 | 16.96 | 0.3351 | ppm |
| 5 | 7 | iron_Fe | 91.68 | -0.31 | 18.53 | 0.2204 | ppm |
| 6 | 3 | copper_Cu | 90.97 | -1.61 | 28.4 | 0.0858 | ppm |
| 7 | 8 | lead_Pb_ppb | 85.62 | 2.62 | 43.51 | 4.6102 | ppm |
| 8 | 9 | manganese_Mn | 92.58 | -3.41 | 29.1 | 0.0165 | ppm |
| 9 | 2 | chlorine_total | 90.85 | -1.62 | 22.68 | 0.104 | ppm |
| 10 | 1 | chlorine_free | 87.97 | -0.52 | 23.36 | 0.3288 | ppm |

New tab | ECE - 02 Review-1 B20 | New tab | Water Strip ML Demo | Simple Browser - WQA | Water Quality analyser

https://special-zebra-69v5vp596vphrjvv-8501.app.github.dev

Expected pads on strip

16 − +

Parameter sequence (IDs) - comma separated Pad1→ID1, Pad2→ID2, ...

15,12,5,6,7,3,8,9,2,1,10,11,14,

✅ Detect Pads

🎯 Predict

## ✅ Predictions

| Pad | Param ID | Parameter | L* | a* | b* | Prediction | Units |
|---|---|---|---|---|---|---|---|
| 7 | 8 | lead_Pb_ppb | 85.62 | 2.62 | 43.51 | 4.6102 | ppm |
| 8 | 9 | manganese_Mn | 92.58 | -3.41 | 29.1 | 0.0165 | ppm |
| 9 | 2 | chlorine_total | 90.85 | -1.62 | 22.68 | 0.104 | ppm |
| 10 | 1 | chlorine_free | 87.97 | -0.52 | 23.36 | 0.3288 | ppm |
| 11 | 10 | nitrate_NO3 | 86.13 | 0.27 | 18.5 | 1.3287 | ppm |
| 12 | 11 | nitrite_NO2 | 87.52 | -0.14 | 20.64 | 0.6729 | ppm |
| 13 | 14 | sulfate_SO4 | 87.69 | -0.25 | 19.91 | 29.956 | ppm |
| 14 | 16 | zinc_Zn | 84.46 | 1.71 | 16.34 | 1.4276 | ppm |
| 15 | 13 | sodium_chloride_NaCl | 74.04 | 18.74 | 17.04 | 146.7562 | ppm |
| 16 | 4 | fluoride_F | 71.43 | 16.91 | 43.02 | 24.572 | ppm |

- **Results:**

1. **Tap Water Tested Strip-Hyderabad**

| Pad | Param ID | Parameter | L* | a* | b* | Prediction | Units |
|---|---|---|---|---|---|---|---|
| 1 | 15 | total_alkalinity_Ca | 88.02 | -4.17 | 56.3 | 61.040176 | ppm |
| 2 | 12 | pH | 87.32 | -2.68 | 41.77 | 8.099691 | ppm |
| 3 | 5 | hardness_CaCO3 | 78.55 | -1.92 | 13.53 | 1.294566 | ppm |
| 4 | 6 | hydrogen_sulfide_ | 93.66 | 0.01 | 16.96 | 0.335064 | ppm |
| 5 | 7 | iron_Fe | 91.68 | -0.31 | 18.53 | 0.220355 | ppm |
| 6 | 3 | copper_Cu | 90.97 | -1.61 | 28.4 | 0.085817 | ppm |
| 7 | 8 | lead_Pb_ppb | 85.62 | 2.62 | 43.51 | 4.61023 | ppm |
| 8 | 9 | manganese_Mn | 92.58 | -3.41 | 29.1 | 0.016519 | ppm |
| 9 | 2 | chlorine_total | 90.85 | -1.62 | 22.68 | 0.104026 | ppm |
| 10 | 1 | chlorine_free | 87.97 | -0.52 | 23.36 | 0.328805 | ppm |
| 11 | 10 | nitrate_NO3 | 86.13 | 0.27 | 18.5 | 1.328655 | ppm |
| 12 | 11 | nitrite_NO2 | 87.52 | -0.14 | 20.64 | 0.672883 | ppm |
| 13 | 14 | sulfate_SO4 | 87.69 | -0.25 | 19.91 | 29.955987 | ppm |
| 14 | 16 | zinc_Zn | 84.46 | 1.71 | 16.34 | 1.42757 | ppm |
| 15 | 13 | sodium_chloride_ | 74.04 | 18.74 | 17.04 | 146.756208 | ppm |
| 16 | 4 | fluoride_F | 71.43 | 16.91 | 43.02 | 24.572043 | ppm |

## Results:
## 2. Borewell Water Tested Strip - NALGONDA

| Pad | Param ID | Parameter | L* | a* | b* | Prediction | Units |
|---|---|---|---|---|---|---|---|
| 1 | 15 | total_alkalinity_CaCO3 | 85.1 | -17.7 | 18.96 | 128.02373 | ppm |
| 2 | 12 | pH | 93.67 | 4.84 | 10.24 | 9.177654 | ppm |
| 3 | 5 | hardness_CaCO3 | 70.47 | 12.63 | -23.67 | 57.44933 | ppm |
| 4 | 6 | hydrogen_sulfide_H2S | 100 | 0 | 0 | 0.024043 | ppm |
| 5 | 7 | iron_Fe | 99.84 | 0 | 0.17 | 0.010838 | ppm |
| 6 | 3 | copper_Cu | 90.66 | -0.69 | 1.02 | 0.491403 | ppm |
| 7 | 8 | lead_Pb_ppb | 88.96 | -0.44 | 8.83 | 1.055361 | ppm |
| 8 | 9 | manganese_Mn | 90.26 | -1.75 | 2.46 | 0.19397 | ppm |
| 9 | 2 | chlorine_total | 89.83 | -0.36 | -2.6 | 0.309121 | ppm |
| 10 | 1 | chlorine_free | 91.73 | 0.47 | -5.1 | 0.059821 | ppm |
| 11 | 10 | nitrate_NO3 | 90.54 | 0.56 | -4.57 | 3.284842 | ppm |
| 12 | 11 | nitrite_NO2 | 89.75 | 0.69 | -4.42 | 0.990021 | ppm |
| 13 | 14 | sulfate_SO4 | 82.37 | 4.26 | -10.97 | 27.700481 | ppm |
| 14 | 16 | zinc_Zn | 75.16 | 28.06 | -4.43 | 1.518354 | ppm |

# Work to Be done – Milestones Achieved

**Work to be done**

**1.** Survey of remaining 50 Papers in Domain of Project
2. II Review (12/10/24)
3.Writing the research Paper
4. Communicating to Conference
5. Project Phase 1 Viva

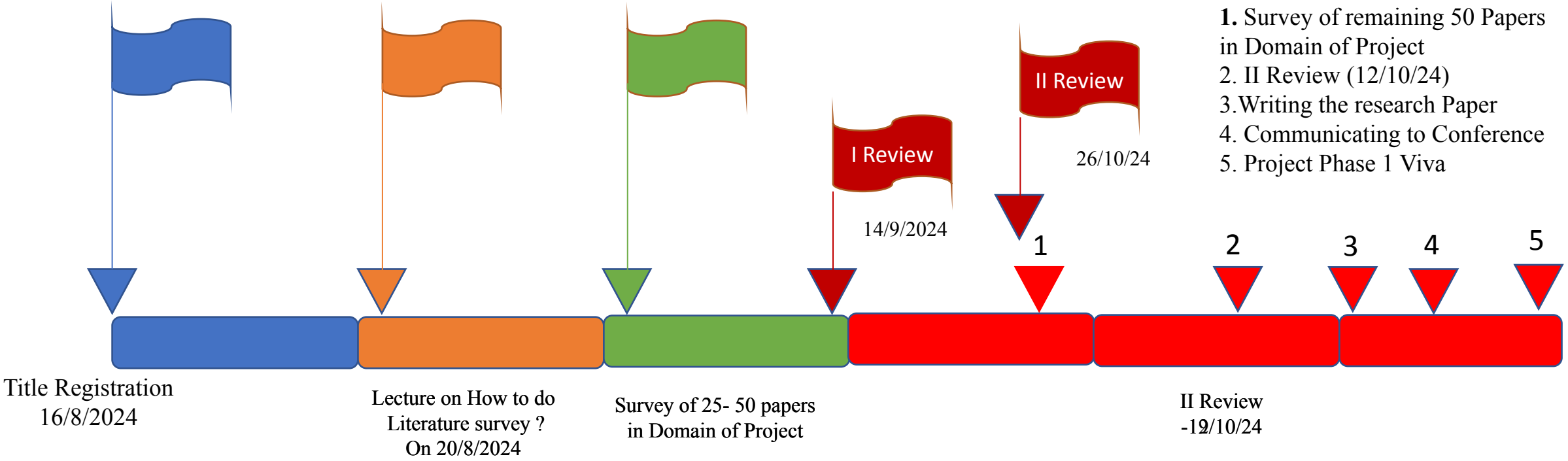


Status: **Completed** → **Completed** → **Completed** → **Scheduled** ← **Pending** →

# Reference

[1] World Health Organization, *Guidelines for Drinking-Water Quality*, 4th ed. Geneva, Switzerland: WHO Press, 2022.

[2] Bureau of Indian Standards, *IS 10500: Drinking Water Specification*, 2nd Revision. New Delhi, India: BIS, 2012.

[3] United States Environmental Protection Agency, *National Primary Drinking Water Regulations*. Washington, DC: EPA, 2021.

[4] UNICEF and WHO, *Progress on Household Drinking Water, Sanitation and Hygiene 2000–2020*. Geneva: United Nations Children's Fund, 2021.

[5] R. R. Trussell, *Drinking Water Quality and Treatment: A Handbook on Drinking Water*, 6th ed. New York, NY: McGraw-Hill, 2012.

[6] S. C. Edberg, E. W. Rice, R. J. Karlin, and M. J. Allen, "Escherichia coli: the best biological drinking water indicator for public health protection," *Journal of Applied Microbiology*, vol. 88, no. S1, pp. 106S–116S, Apr. 2000.

[7] A. H. Havelaar et al., “Global burden of waterborne diseases,” *Proceedings of the National Academy of Sciences*, vol. 112, no. 32, pp. 12301–12306, 2015.

[8] D. L. Eaton, L. S. Klaassen, and C. D. Klaassen, *Casarett and Doull’s Toxicology: The Basic Science of Poisons*, 9th ed. New York, NY: McGraw-Hill, 2019.

[9] R. A. Larson and E. J. Weber, *Reaction Mechanisms in Environmental Organic Chemistry*. Boca Raton, FL: CRC Press, 1994.

[10] P. S. Rainbow, “Trace metal concentrations in aquatic invertebrates: why and so what?” *Environmental Pollution*, vol. 120, no. 3, pp. 497–507, Mar. 2002.

[11] J. Nriagu, *Lead Toxicity in Humans: Sources and Health Impacts*. New York: Wiley, 2018.

[12] A. T. Lawal and F. G. Oyewole, “Determination of nitrate and nitrite in drinking water: a review,” *Journal of Environmental Chemical Engineering*, vol. 8, no. 4, pp. 103–112, 2020.

[13] R. Fawell and M. J. Bailey, “Fluoride in drinking water: a scientific review of EPA’s standards,” *Environmental Health Perspectives*, vol. 114, no. 3, pp. 367–371, 2006.

[14] S. Chowdhury, M. Champagne, and P. McLellan, “Residual chlorine in drinking water: an analysis of physicochemical factors,” *Water Research*, vol. 43, no. 17, pp. 4207–4214, Nov. 2009.

[15] A. M. Hassen et al., “Microbial quality of drinking water and prevalence of waterborne diseases in developing countries,” *Environmental Monitoring and Assessment*, vol. 185, no. 12, pp. 10257–10263, 2013.

[16] P. Kumar and R. Yadav, “Heavy metal contamination in groundwater: health risk assessment,” *Environmental Science and Pollution Research*, vol. 27, no. 2, pp. 1125–1136, 2020.

[17] A. K. Shukla and V. K. Gupta, “Photometric detection of trace metals in water: techniques and applications,” *Analytical Methods*, vol. 11, no. 4, pp. 567–576, 2019.

[18] J. Choi et al., “Smartphone-based colorimetric analysis for environmental monitoring,” *Sensors and Actuators B: Chemical*, vol. 304, p. 127273, Jan. 2020.

[19] M. Hosseinpour et al., “Deep learning for colorimetric detection in chemical sensing,” *Analytica Chimica Acta*, vol. 1170, pp. 338649, Nov. 2021.

[20] D. Wu, F. Wu, and B. Liang, “IoT-enabled water quality monitoring: a review,” *IEEE Internet of Things Journal*, vol. 9, no. 3, pp. 1574–1589, Feb. 2022.

[21] P. Ghosh and A. Banerjee, “Applications of IoT in smart cities: water quality perspective,” *Smart Sustainable Cities and Societies*, vol. 2, pp. 89–101, 2022.

[22] Y. Zhang, X. Lin, and W. Zhang, “Low-cost colorimetric detection of heavy metals using paper-based devices,” *ACS Sensors*, vol. 4, no. 12, pp. 3102–3109, Dec. 2019.

[23] M. A. Hassan et al., “Evaluation of rapid test kits for microbiological water analysis: a systematic review,” *Water Research*, vol. 182, pp. 115939, Jan. 2020.

# *Thank you*